Total Hours = 120

# CES ACES Concentration
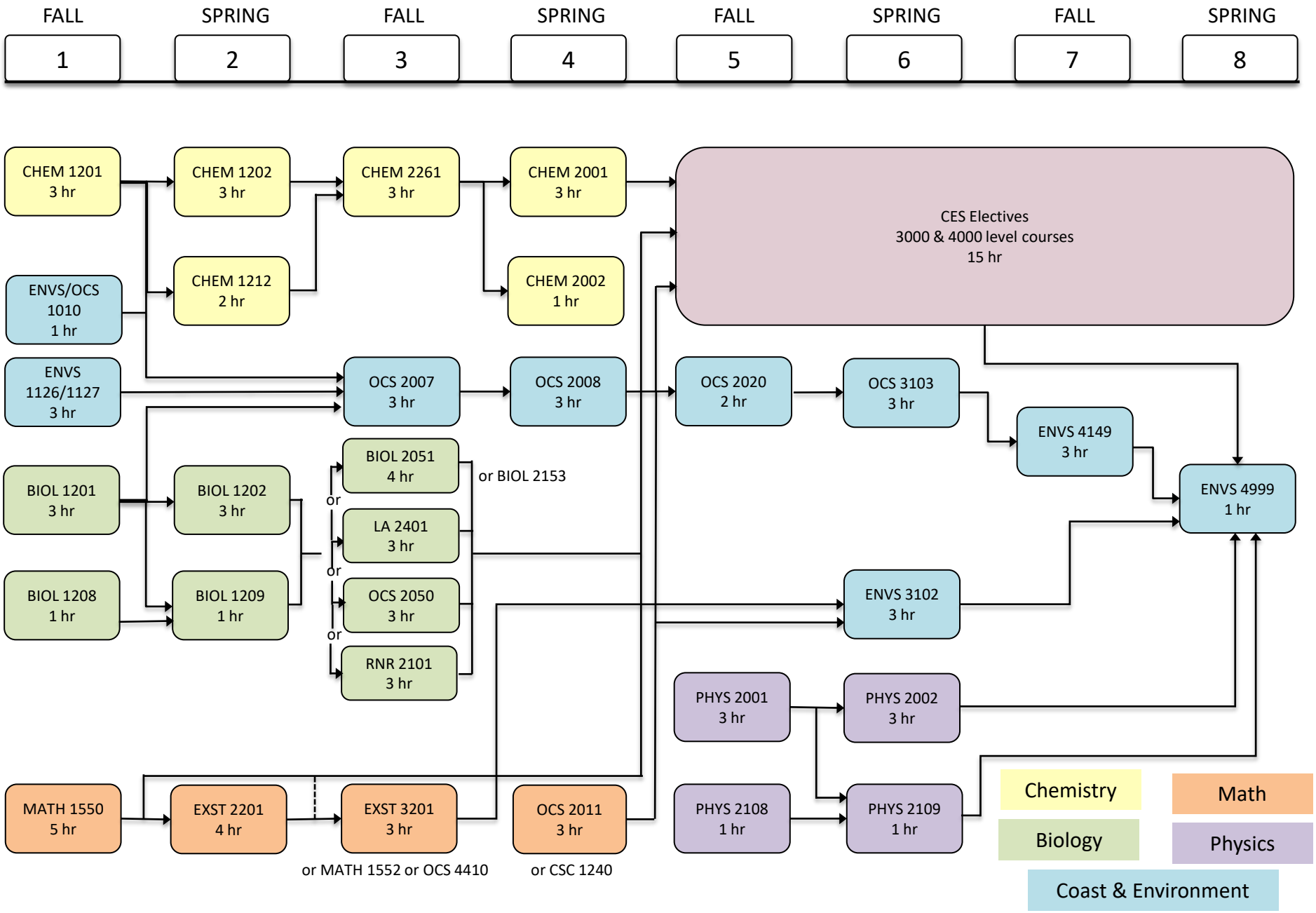
2021-2022